WINPOWER

A Division of DTI Dyna Technology Inc

PARTS LIST

DR45I4

WITH BASLER DGC-2020 CONTROL

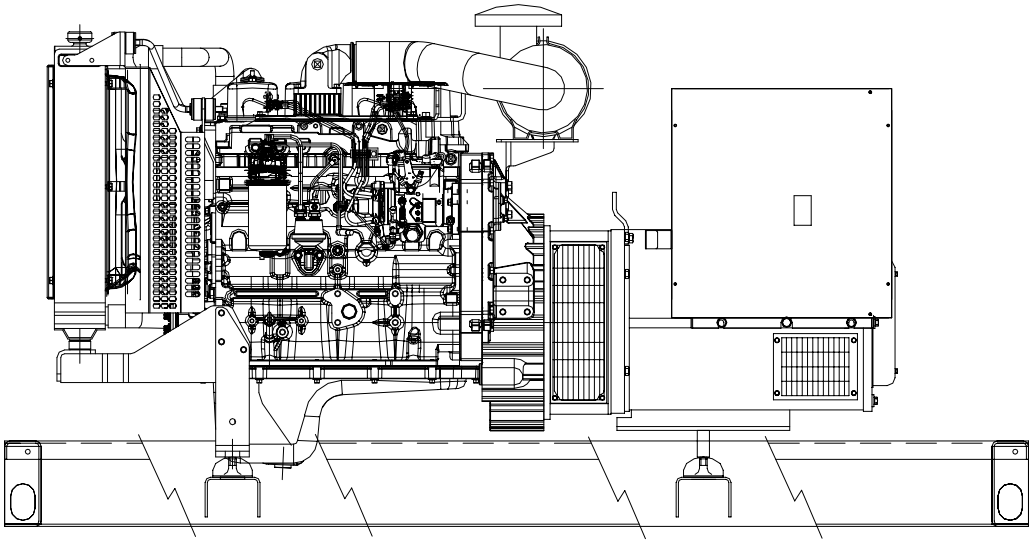

8161-00

60704-153

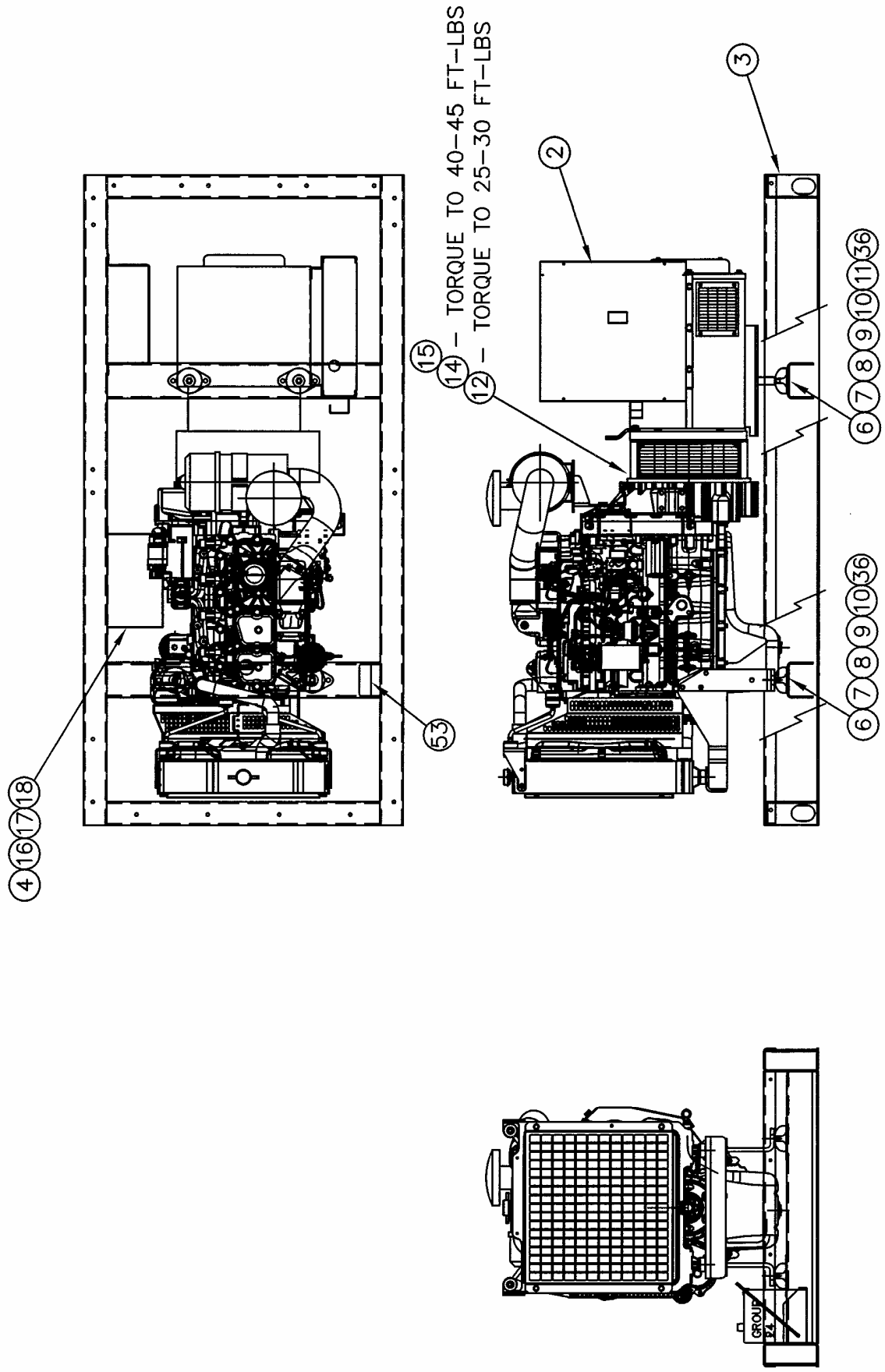
15
14 – TORQUE TO 40–45 FT–LBS
12 – TORQUE TO 25–30 FT–LBS
2
3
6 7 8 9 10 11 36
6 7 8 9 10 36
4 16 17 18
53
GROUP
24

ENGINE/GENERATOR ASSEMBLY

ITEM	PART NO	QUAN.	DESCRIPTION
1	B–350001–60	1	ENGINE
2	SEE TABLE	1	GENERATOR
3	B–351906	1	WELDMENT, BASE
4	A–350110–5	1	TRAY, BATTERY
5	20039–000	1	LOCKWASHER 1/2 EXTERNAL
6	A–98956–002	4	SHOCKMOUNT
7	48178–000	8	HHCS 1/2–13 x 1
8	57580–000	3	HHCS 1/2–13 x 1 1/2
9	636–000	4	SLW 1/2
10	1744–000	4	HN 1/2
11	A–350720–3	2	SPACER, GENERATOR MOUNTING
12	A–96003–025	8	HHCS M10–1.5 x 25(FLY WHEEL)
13	16248–001	9	NUT, HEX 1/2–13 FLANGE LOCK
14	A–96003–40	12	HHCS M10–1.5 x 40 (BELL HOUSING)
15	A–97436–10	20	SLW M10
16			
17	80124–008	TABLE	CT 500:5
18	16249–000	8	HN 5/16–18 FLANGE LOCK
19	A–99288–004	1	KIT, BATTERY HOLD DOWN (SHIP LOOSE)
20	B–96580–009	1	CABLE, BATTERY (POSITIVE)
21	B–96580–007	1	CABLE, BATTERY (NEGATIVE)
22	A–512–000	1	FLAT WASHER
23	57580–005	2	HHCS 1/2–13 x 4
24	60710–97	1	TAG, OIL
25	B–15209–000	1	WARNING, ELECTRIC SHOCK
26	351113–5	1	PANEL, GEN LEFT SIDE
27	300349–5	1	ADAPTER OIL PRESSURE SENDER
28	A–97391–008	1	CUSHIONED WIRING/TUBE CLAMP
29	A–80980–000	1	START SOLENOID
30	A–350740	1	MTG BRACKET, START SOLENOID

PART NO	ITEM 2	QTY 17	ITEM 44	PHASE
B–351907–1	B–350003–731	2	B–91447–005	SINGLE–120/240
B–351907–2	B–350003–702	3	NONE	THREE–ALL

ENGINE/GENERATOR ASSEMBLY CONTINUED

32	A–98906–014	1	OIL DRAIN VALVE M22
33	A–80781–003	1	KIT, BLOCK HEATER
34			
35	300553	1	KIT, COOLANT RECOVERY TANK
36	A–93542–010	2	LEADWIRE ASSY
37	A–99267–001	1	OIL PRESSURE SWITCH
38	B–351933	1	HARNESS GEN END
39	A–99265–001	1	COOLANT TEMP SENDER
40	B–351903	1	CONTROL PEDESTAL
41	B–351901–1	1	HARNESS ENGINE
42	B–351888	1	ASSEMBLY, ENGINE CONTROL
43	B–300533	1	ASSEMBLY, MLCB BOX
44	SEE TABLE	1	MLCB
45	65001–001	4	SS HHCS 5/16–18 X 3/4
46	A–300349–1	1	ADAPTOR
47	A–92388–000	2	HOSE FITTING
48	A–56372–000	2	HEX REDUCING BUSHING
49	98906–005	1	OIL DRAIN VALVE M18, BLOCK HEATER
50	A–93341–008	1	LW M8
51	A–93341–010	1	LW M10

53	A–97381–001	1	DIESEL FUEL DECAL
52	92157–001	1	ROMEX CONNECTOR 1”
53	A–94442–005	1	HN M10
54	A–94442–003	1	HN M8
55	93689–001	10FT	5/8 HOSE
56	94270–020	2	HHCS M12–1.75 X 20MM
57	93341–012	2	LOCKWASHER M12 ZINC
58	93084–000	2	1/2 PIPE PLUG

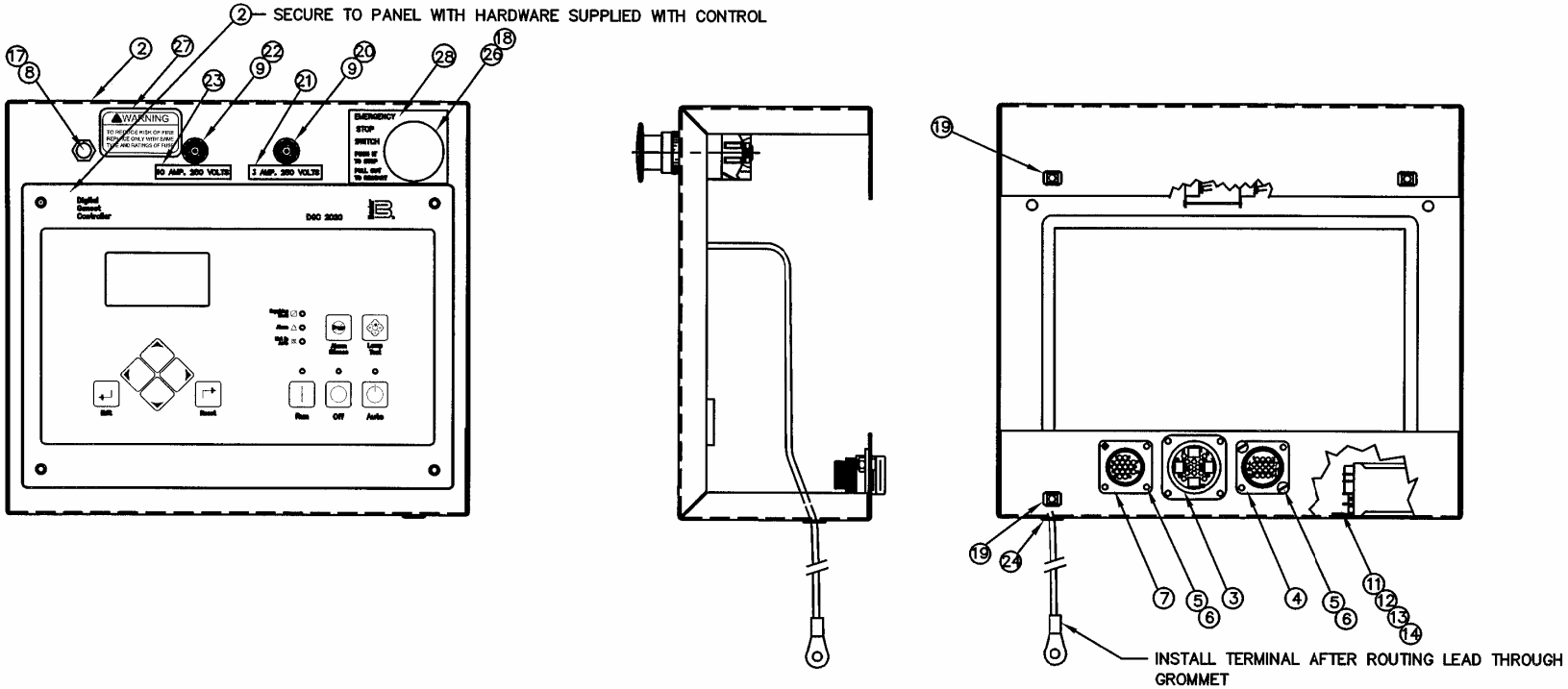

ITEM	PART NO	QTY	DESCRIPTION	ITEM	PART NO	QTY	DESCRIPTION
27	A-63941-004	1	FUSE RATING WARNING DECAL	28	A-63941-006	1	EMERGENCY STOP DECAL
25	A-49975-010	8	CABLE TIE	26	A-99783-001	1	EMERGENCY STOP SWITCH
23	A-15983-006	1	10 AMP FUSE DECAL	24	A-45853-000	1	GROMMET
21	A-15983-008	1	3 AMP FUSE DECAL	22	A-95064-006	1	10 AMP. FUSE
19	A-92495-000	4	1/4-20 RETAINED SQUARE NUTS	20	A-95064-000	1	3 AMP. FUSE
17	A-97517-001	1	REOSTAT, VOLTAGE ADJUSTING	18	A-99783-002	1	E-STOP SWITCH
15	A-300542	1	BATTERY	16			
13	21976-000	2	LOCKWASHER #8	14	5113-000	2	HEXNUT #8-32
11	B-59944-003	1	RELAY	12	6402-001	2	BZ BIND, HMS #8-32 X 3/8
9	A-2489-001	2	FUSE HOLDER	10	B-351889	1	ASSEMBLY, WIRING DIAGRAM
7	A-96925-006	1	16 PIN CONNECTOR	8	A-94394-000	1	KNOB
5	24988-000	6	#6-32 X 1/2 BINDING HEAD SCREW	6	51802-000	6	#6-32 ELASTIC STOPNUT
3	A-96925-003	1	16 PIN CONNECTOR	4	A-96925-002	1	14 PIN CONNECTOR
1	A-351900	1	CONTROL BOX FRONT PANEL	2	A-351855-1	1	ENGINE CONTROL

ENCLOSURE ASSEMBLY

ITEM	PART NO	QUAN.	DESCRIPTION
36			
35	A–9769–153	4	BONDING WIRE, DOOR
34			
33	B–351910	1	HSG, REAR
32	B–351936–5	4	BAFFLE, TOP DOOR
31	B–351936–4	2	BAFFLE, REAR HOUSING
30	A–350207–3	4	HINGE, SIDE DOOR
29	A–95229–005	8	LATCH
28			
27			
26	A–15209–000	2	DECAL, ELECTRICAL DANGER
25	A–63941–001	3	DECAL, HOT SURFACE
24	A–97813–000	4	DECAL, CYCLE CRANK
23	B–351875–3	1	ROOF
22			
21	B–350280–4	4	HSG, SIDE DOOR
20	B–351759–3	2	HSG, MID DOOR SUPPORT
19			
18	A–351865–3	1	RADIATOR OUTLET
17			
16	A–351867–3	1	SILL, TOP REAR
15	A–300552–3	1	ASSEMBLY, RIGHT REAR CORNER
14	A–300552–2	1	ASSEMBLY, LEFT REAR CORNER
13			
12	A–350239–1	1	HOLDER, DOCUMENT
11			
10	A–16250–000	20	FN 3/8–16
9			
8	A–300552–1	4	ASSEMBLY, TOP DOOR
7	B–351859–6	1	HOUSING, FRONT RIGHT CORNER POST
6	B–351859–5	1	HOUSING, FRONT LEFT CORNER POST
5			
4	A–351861–6	1	HOUSING, RADIATOR TOP
3	A–351861–5	1	HOUSING, RADIATOR BOTTOM
2			
1			

ENCLOSURE ASSEMBLY CONTINUED

57	A–64914–000	4	M6 RETAINER NUT
56	B–351607–2	1	KIT, CRITICAL EXHAUST
55	A–65001–001	120	HHCS SS 5/16–18 x 3/4
54	A–65006–001	8	5/16–18 SS FLANGE NUT
53	A–91658–001	20	HHCS 3/8–16 X 1
52	A–15424–000	8	RUBBER FOOT (DOOR BUMPER)
51	A–21253–000	8	1/4–20 X 3/4 ROUND HEAD SCREW
50	A–65005–001	29	5/16 SS FLAT WASHER
49	A–21698–001	40	#10 SELF TAPPING SCREW
48			
47	A–16249–000	86	5/16–18 HEX FLANGENUT
46	A–16248–000	12	1/4–20 HEX FLANGENUT
45			
44	A–65003–000	4	SLW SS – 1/4
43	A–65000–000	4	HHCS SS 1/4–20 x 5/8
42	A–92419–000	29	NUT RETAINER, 5/16–18
41	A–62912–001	70 FT	STRIP – 7/8" WIDE
40	A–98879–001	32	THREADSTUD 5/16–18 x 3/4
39			
38			
37			
ITEM	PART NO	QUAN.	DESCRIPTION

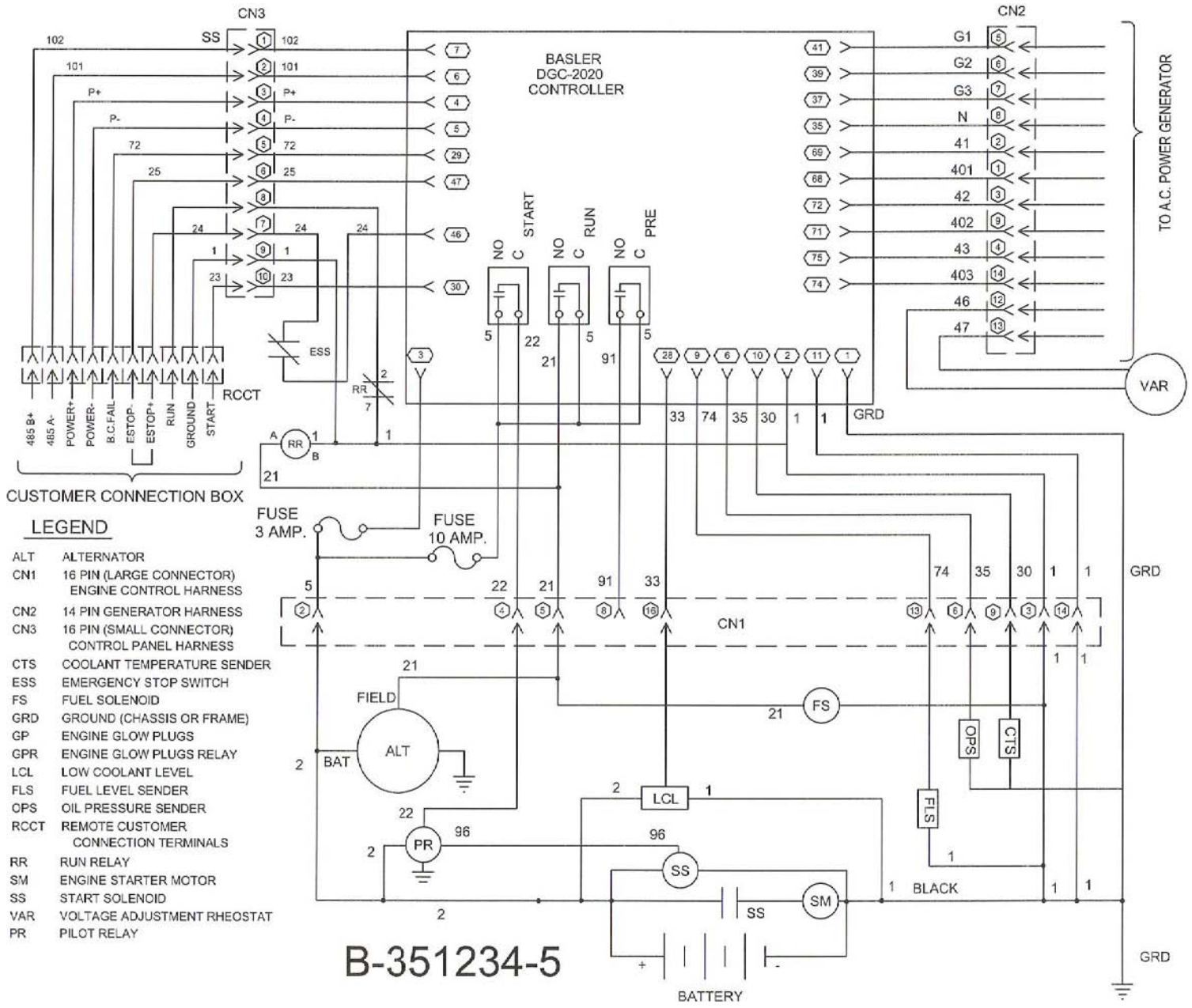

LEGEND

ALT	ALTERNATOR
CN1	16 PIN (LARGE CONNECTOR) ENGINE CONTROL HARNESS
CN2	14 PIN GENERATOR HARNESS
CN3	16 PIN (SMALL CONNECTOR) CONTROL PANEL HARNESS
CTS	COOLANT TEMPERATURE SENDER
ESS	EMERGENCY STOP SWITCH
FS	FUEL SOLENOID
GRD	GROUND (CHASSIS OR FRAME)
GP	ENGINE GLOW PLUGS
GPR	ENGINE GLOW PLUGS RELAY
LCL	LOW COOLANT LEVEL
FLS	FUEL LEVEL SENDER
OPS	OIL PRESSURE SENDER
RCCT	REMOTE CUSTOMER CONNECTION TERMINALS
RR	RUN RELAY
SM	ENGINE STARTER MOTOR
SS	START SOLENOID
VAR	VOLTAGE ADJUSTMENT RHEOSTAT
PR	PILOT RELAY